Z2 PRO

Guía de bienvenida

DIBUPERU SAC

www.digitalbusinessperu.com

Estimado cliente:

Gracias por elegir el brazo de monitor ARCTIC Z2.

Las personas inteligentes utilizan dos monitores y, de este modo, potencian su productividad y ergonomía. Este robusto soporte mantendrá sus monitores a salvo y el escritorio limpio, con espacio libre para usted y permitirle usar dispositivos USB más fácilmente que nunca.

Espero que disfrute nuestro Z2 y aquí, en ARCTIC esperamos enriquecer aún más su vida con nuestros productos. Si desea compartir cómo utiliza los productos ARCTIC, por favor, hágalo en https://www.facebook.com/ARCTIC.es

ARCTIC es una empresa emisora neutral de carbono y su apoyo nos ayuda a compensar cada kilogramo de CO2 que producimos. Gracias.

Atentamente,

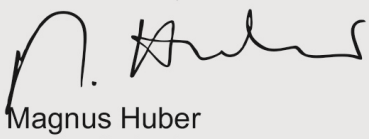

Magnus Huber
ARCTIC CEO

Accessories

Ⓐ Pole x 1

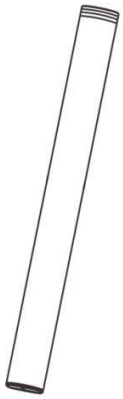

Ⓑ Mounting Arm with Lockable Screw x 1

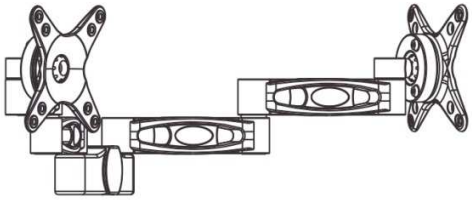

Ⓒ Clamp x 1

Ⓓ USB Hub x 1

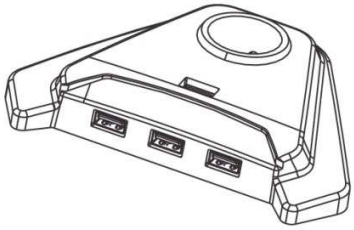

Ⓔ Pole Clamp x 1

Ⓕ Hex Key (3 mm) x 1

Ⓖ Hex Key (4 mm) x 1

Ⓗ Hex Key (5 mm) x 1

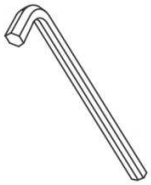

Ⓘ Power Adapter x 1

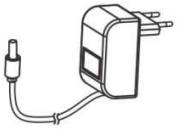

Ⓙ M4 / M5 Spacer x 8

Ⓚ Cable Clip x 1

Ⓛ M6 Screw (12 mm) x 4

Ⓜ M5 Screw (12 mm) x 8

Ⓝ M4 Screw (12 mm) x 8

Ⓞ M4 Screw (30 mm) x 8

Ⓟ M5 Screw (30 mm) x 8

Ⓠ Grommet x 1

⚠ This Monitor Arm is not suitable for Honeycomb-structured or Sandwich structured tables with hollow pockets.

Examples of NOT recommended tables, using a paper honey comb filling: IKEA MALM Desk, IKEA TORNLIDEN, IKEA ODDVALD, IKEA LINNMON, IKEA LALLE, IKEA TORNLIDEN, and IKEA ADILS Desk

Wooden

Fiberboard

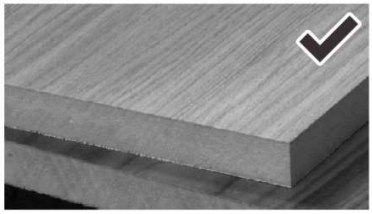

Particleboard

Honeycomb Structure recycled paper

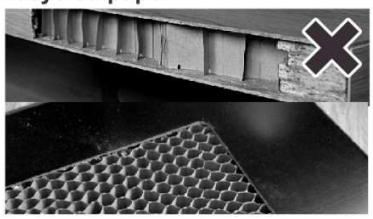

A. Desk Clamp Installation

1A

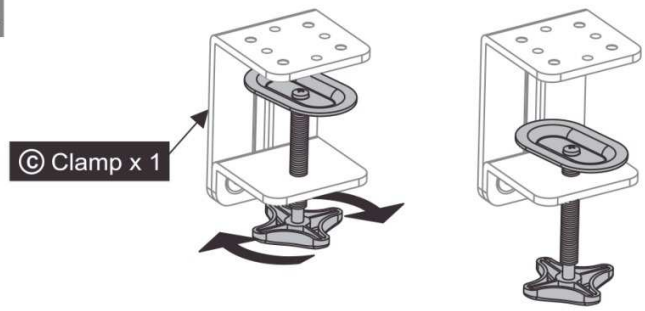

2A Attach the desk clamp to the base with 4 mm hey key

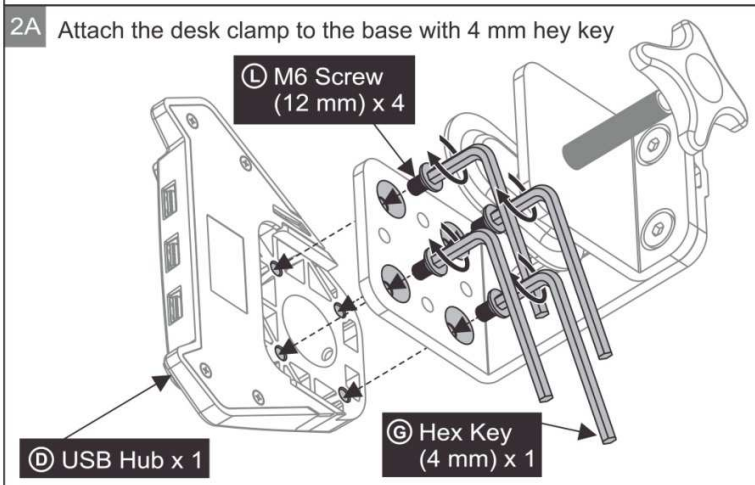

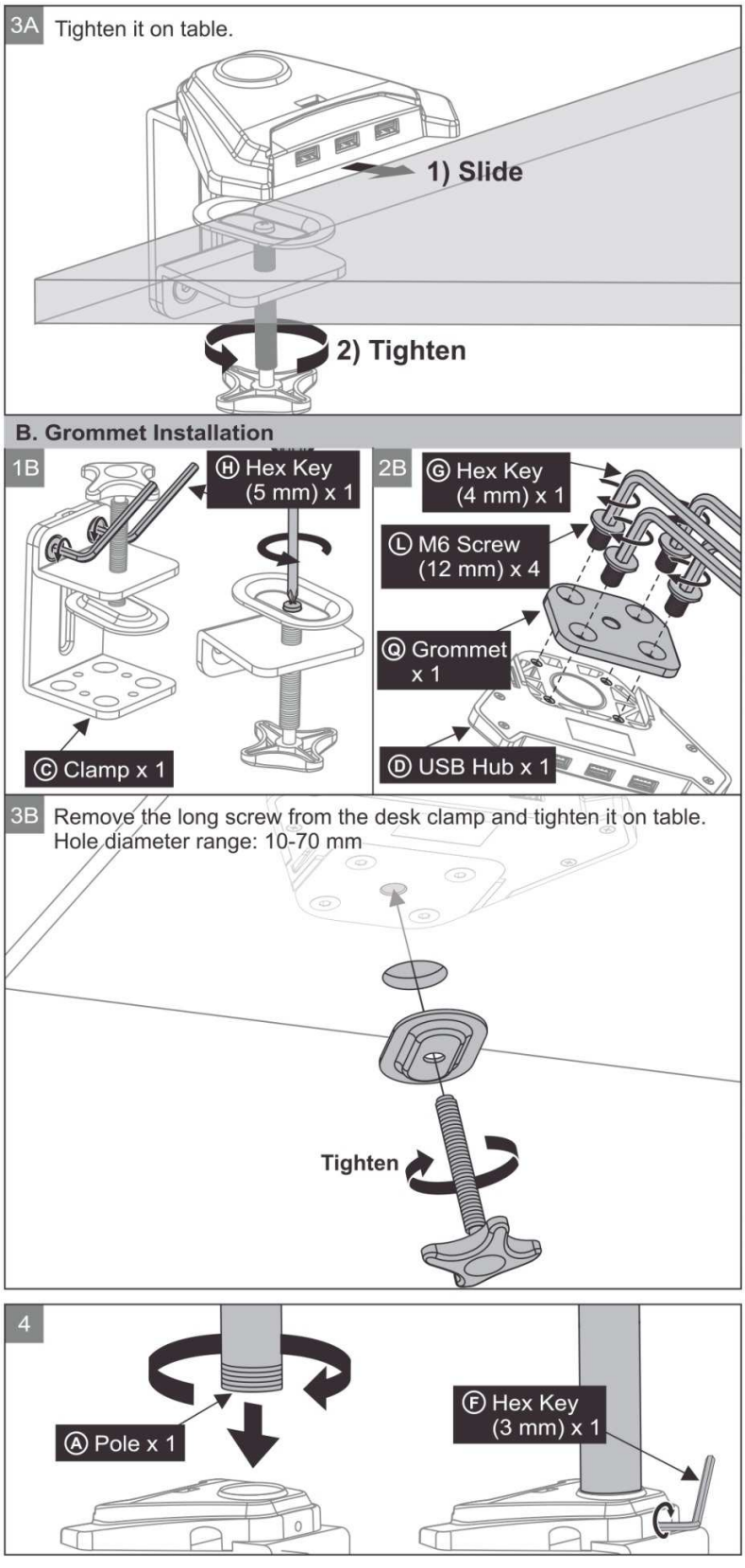
3A Tighten it on table.
1) Slide
2) Tighten
B. Grommet Installation
1B
Ⓗ Hex Key (5 mm) x 1
Ⓒ Clamp x 1
2B
Ⓖ Hex Key (4 mm) x 1
Ⓛ M6 Screw (12 mm) x 4
Ⓠ Grommet x 1
Ⓓ USB Hub x 1
3B Remove the long screw from the desk clamp and tighten it on table.
Hole diameter range: 10-70 mm
Tighten
4
Ⓐ Pole x 1
Ⓕ Hex Key (3 mm) x 1

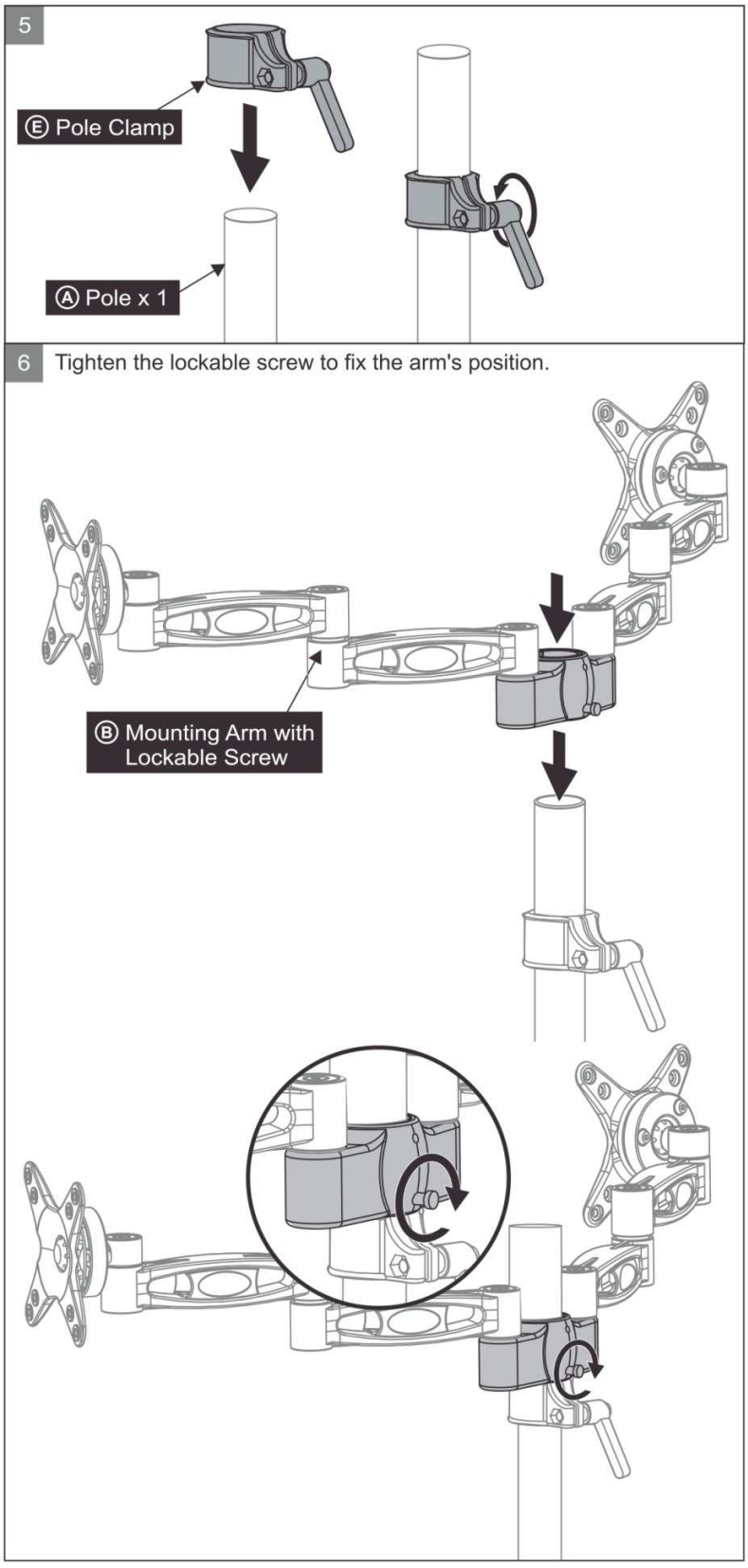
5
Ⓔ Pole Clamp
Ⓐ Pole x 1
6
Tighten the lockable screw to fix the arm's position.
Ⓑ Mounting Arm with Lockable Screw

7 Choose the right screws according to the size and depth of the holes at the back of the monitors. Spacers are used to fill the gap between the mounting bracket and the holes if any.

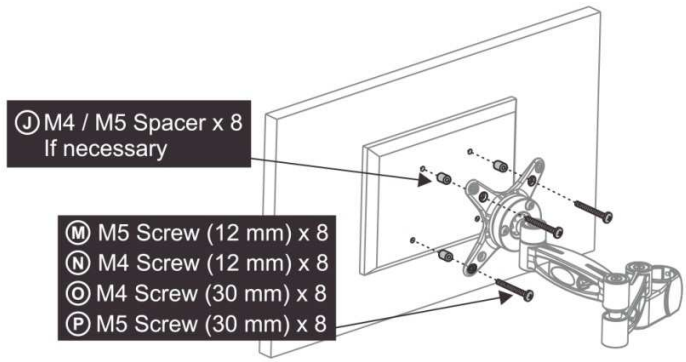

VESA 100
Distance 100 mm

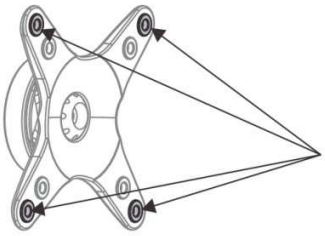

VESA 75
Distance 75 mm

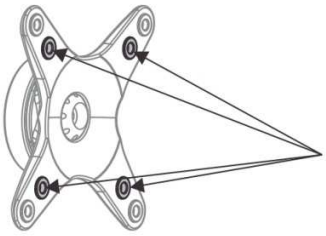

Table of VESA Mounting Interface Standard

Designation	Width × Height	Screw	Compatible
MIS-D 75	75 mm × 75 mm	M4, M5	Yes
MIS-D 100	100 mm × 100 mm	M4, M5	Yes
MIS-E	200 mm × 100 mm	M4	No
MIS-F	200 mm × 200 mm 400 mm × 400 mm 600 mm × 200 mm 600 mm × 400 mm 800 mm × 400 mm 280 mm × 150 mm	M6, M8	No

8 Adjust the flexibility of the hinges with the hex key and the lockable screw.

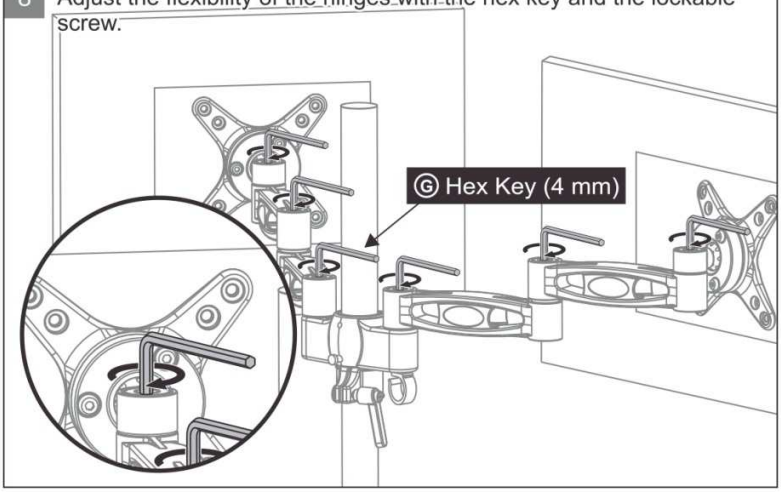

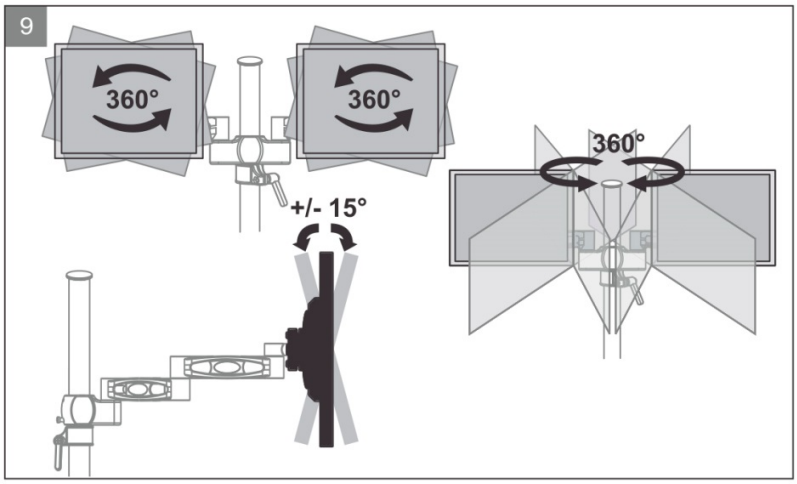

Adjust the Tightness of the Monitors

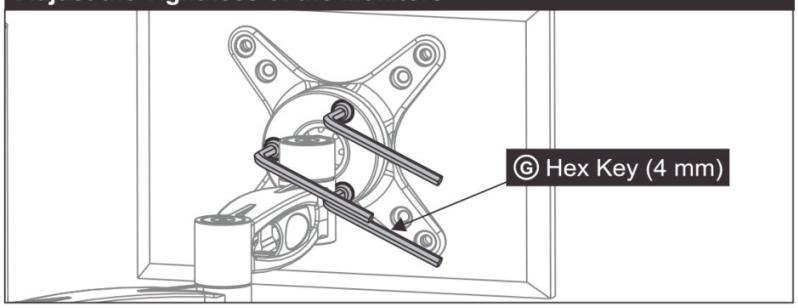

How to Plug Hub

Connect the USB cable to PC.
Connect the DC jack with adapter and to the wall socket.

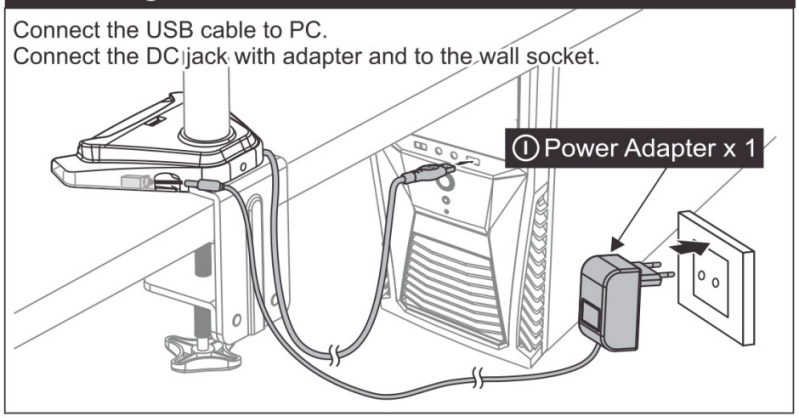

Cable Management

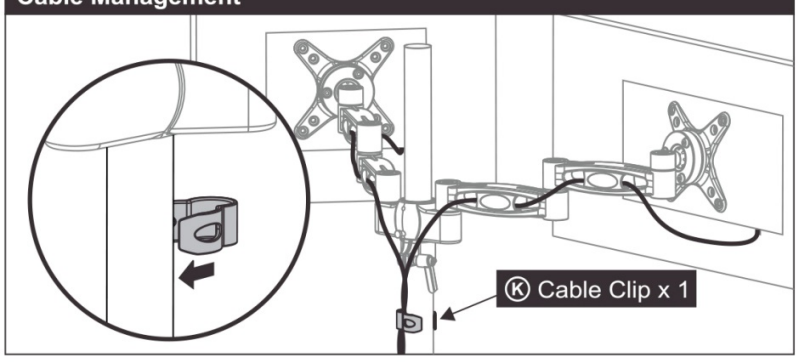

Specifications	
ARM	
Material	Aluminum Alloy ADC 12
Number of Mountable Monitors	2
Screen Size	13 " - 27 "
Maximum Monitor Weight	10 kg / 22 lbs per mount
VESA Standard	75 / 100
Rotation	360 °
Swivel	180 °
Tilt	+/- 15 °
Distance to the Pole	11 - 41 cm
Max Table Thickness	6.5 cm
Weight	4 kg
USB Hub	
Type	4 ports USB 3.0 , Powered
Compatibility	Windows 10 , 8.1 , 7 , Vista , XP Mac OS X Linux
Cable Length	2 m
Power Adapter	
Type	100 - 240 V AC, 50 / 60 Hz, 0.55 A
Output	5 V DC , 2 A
Cable Length	2 m

Support
For support and more information on the Z2 Pro - Desk Mount Monitor Arm with 4 Port USB Hub, please visit support.arctic.ac/z2pro

Warranty
This ARCTIC Product includes a two-year limited warranty.
Please visit http://warranty.arctic.ac for further details.

Safety Instructions
The desk structure must be able to support at least 30 kg. Tighten the screws for a secure mount. It is recommended to perform the installation with at least two people.

Like us on facebook
www.facebook.com /dibuperu sac

EC Declaration of Conformity
ARCTIC declares under its sole responsibility that this product is compliant with the provisions of the electromagnetic compatibility directive (2004/108/EC) and the Restriction of the use of certain hazardous substances directive (2011/65/EU). A detailed Declaration of Conformity is available at http://z2pro.arctic.ac#support

Directive 2002/96/EC about Waste of Electrical and Electronic Equipment (WEEE)
Waste of Electrical and Electronic Equipment must not be disposed of with domestic waste. If the device cannot be used anymore, the user is legally obliged to separate it from domestic waste and hand it over to a designated collection point of his community/district. Thereby it is guaranteed that the Waste of Electrical and Electronic Equipment is recycled properly and negative impacts for the environment are avoided.
Therefore, electronic devices are marked by this sign.

ARCTIC and the ARCTIC logo are registered trademarks of Boost Up International Limited.

© 2016 ARCTIC (HK) Ltd. All rights reserved.
No part of this manual including the products described in it, may be reproduced, transmitted, stored in a retrieval system, or translated into any language in any form or by any means, except documentation kept by the purchaser for backup purpose, without the express written permission of ARCTIC (HK) Ltd. In no event shall ARCTIC, its directors or employees be liable for any indirect damages, incidental or consequential damages arising from any defect or error in this manual or product.

PKMNL00031B